HSOP16: plastic, heatsink small outline package; 16 leads **SOT822-1**

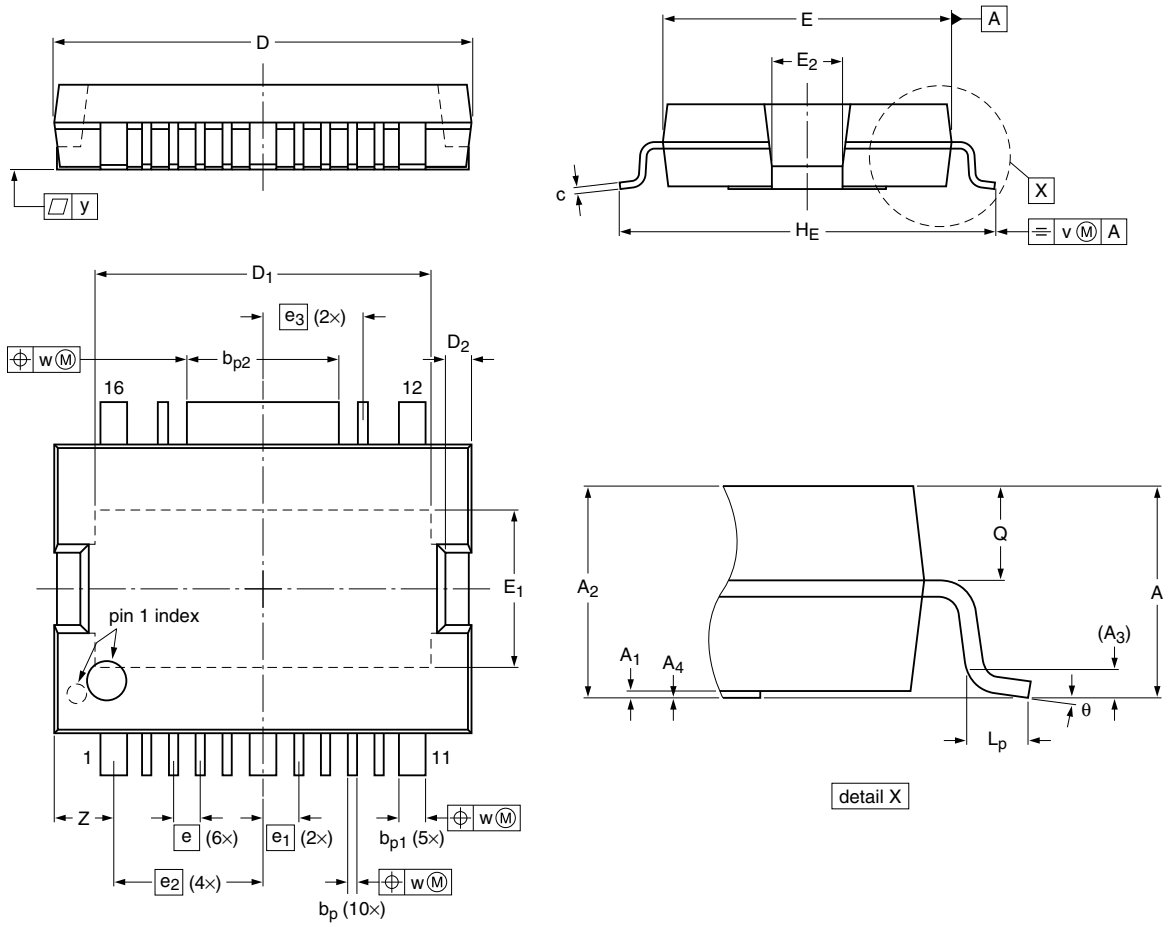

Q	v	w	y	Z	θ
1.5				2.5	8°
	0.25	0.25	0.1		
1.4				2.0	0°

0 5 10 mm
scale

Dimensions

Unit(1)		A	A_1	A_2	A_3	A_4	b_p	b_{p1}	b_{p2}	c	D(1)	D_1	D_2	E(1)	E_1	E_2	e	e_1	e_2	e_3	H_E	L_p
mm	max		0.2	3.5		0.06	0.43	1.09	5.87	0.32	16.0	13.0	1.1	11.1	6.2	2.9					14.5	1.1
	nom	3.6			0.35												1.02	1.37	5.69	3.81		
	min		0	3.2		−0.06	0.28	0.94	5.72	0.23	15.8	12.6	0.9	10.9	5.8	2.5					13.9	0.8

Note
1. Plastic or metal protrusions of 0.25 mm maximum per side are not included

sot822-1_po

Outline version	References				European projection	Issue date
	IEC	JEDEC	JEITA			
SOT822-1						~~07-02-08~~ 10-10-20

© 2010 NXP B.V.
All rights reserved. Reproduction in whole or in part is prohibited without prior consent of the copyright owner. The information presented in this document does not form part of any quotation or contract, is believed to be accurate and reliable and may be changed without notice. No liability will be accepted by the publisher for any consequence of it's use. Publication thereof does not convey or imply any license under patent- or other industrial or intellectual property rights.

Printed in the Netherlands