Package outline

Ceramic surface-mounted package; 2 leads **SOT538A**

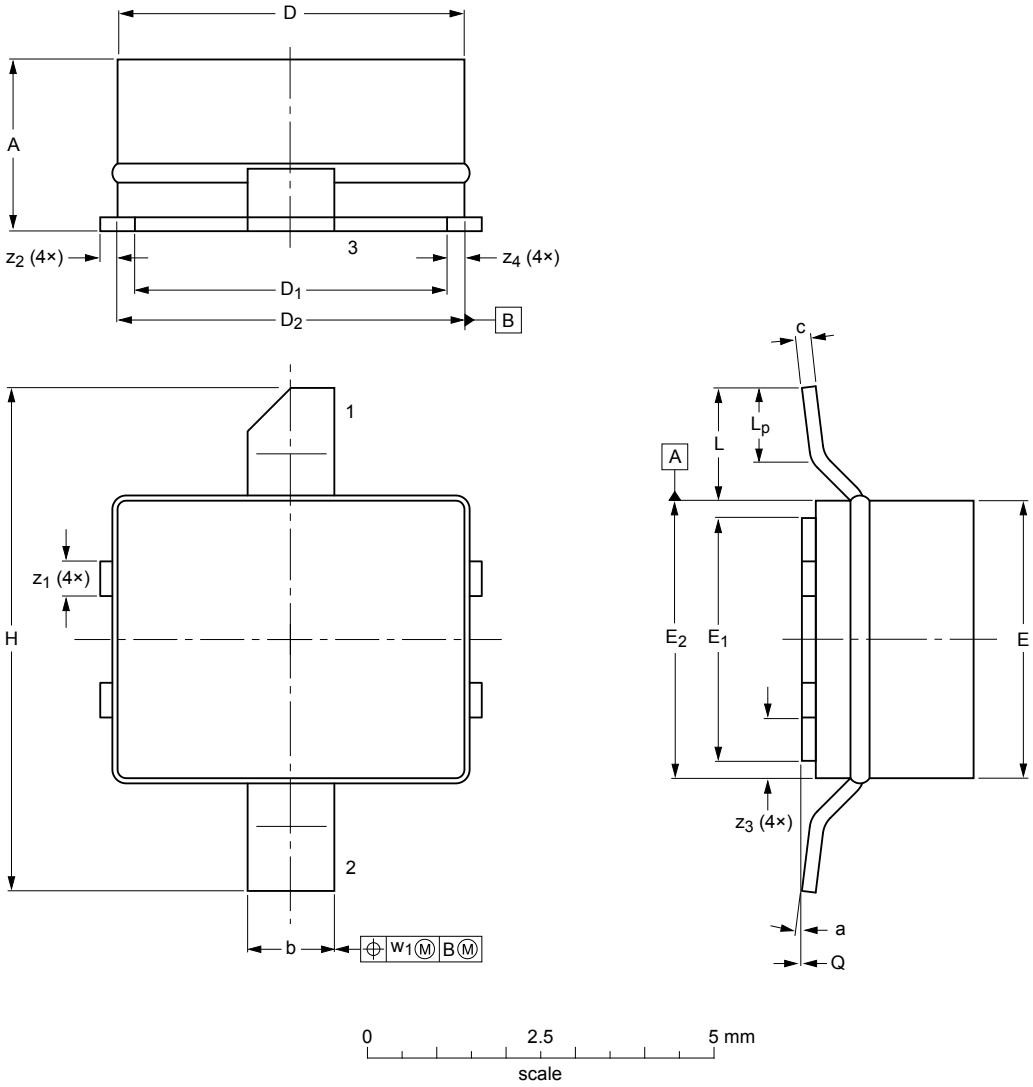

Dimensions (mm are the original dimensions)

Unit		A	b	c	D	D_1	D_2	E	E_1	E_2	H	L	L_p	Q	w_1	z_1	z_2	z_3	z_4	θ
mm	max	2.34	1.35	0.23	5.16	4.65	5.16	4.14	3.63	4.14	7.49	2.03	1.02	0.1		0.58	0.25	0.97	0.51	7°
	nom														0.25					
	min	2.13	1.19	0.18	5.00	4.50	5.00	3.99	3.48	3.99	7.24	1.27	0.51	0.0		0.43	0.18	0.81	0.00	0°

sot538a_po

Outline version	References				European projection	Issue date
	IEC	JEDEC	JEITA			
SOT538A						~~06-03-16~~ 13-02-07

www.nxp.com

© 2010 NXP B.V.
All rights reserved. Reproduction in whole or in part is prohibited without prior consent of the copyright owner. The information presented in this document does not form part of any quotation or contract, is believed to be accurate and reliable and may be changed without notice. No liability will be accepted by the publisher for any consequence of it's use. Publication thereof does not convey or imply any license under patent- or other industrial or intellectual property rights.

Printed in the Netherlands